User's Guide
SLRU007–July 2014

RF430F5978EVM User Guide

This manual describes the software installation, driver installation, the modules and peripherals of RF430F5978EVM. Each description presents the module or peripheral in a general sense. Not all features and functions of all modules or peripherals may be present on all devices. In addition, modules or peripherals may differ in their exact implementation between device families, or may not be fully implemented on an individual device or device family.

Pin functions, internal signal connections, and operational parameters differ from device to device. The user should consult the device-specific data sheet for these details.

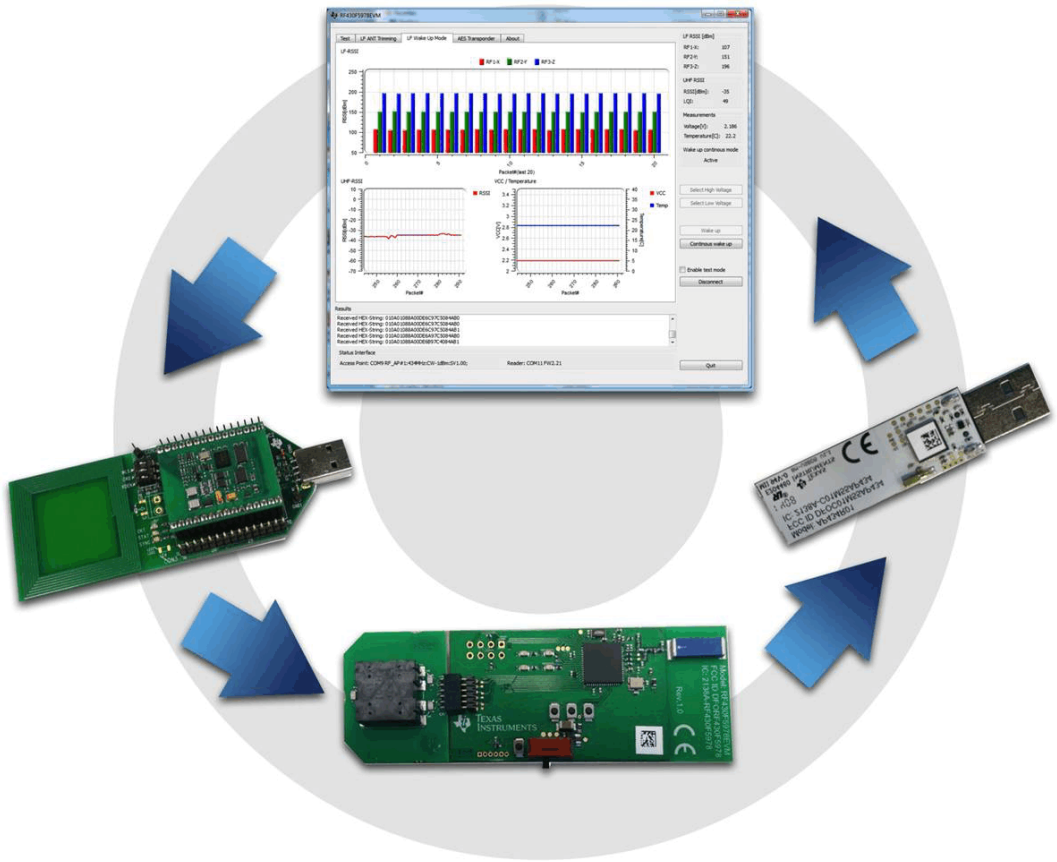

Copyright © 2014, Texas Instruments Incorporated

Topic **Page**

1	Overview	3
2	Related Documentation from Texas Instruments	3
3	RF430F5978 Demo Kit Overview	4
4	Introduction	4
5	Kit Contents	6
6	Required Equipment	6
7	Software, Driver, and Documentation	6
8	Set Up RF430F5978EVM Demo	7
9	Start the Software	9
10	Using the LF Wake-Up Mode With UHF Response	11
11	LF Wake-Up Mode Tab	12
12	LF Antenna Trimming Tab	14
13	Test Tab	15
14	AES Transponder User Interface	16
15	UHF Configuration Settings	19
16	Configuration Software for UHF block	19
17	RF430F5978EVM Hardware Description	20
18	Programming Hardware Interface	21
19	Professional Software Development Tools	23
20	Schematics	24

Copyright © 2014, Texas Instruments Incorporated

1 Overview

To get started evaluating the RF430F5978 MCU, system developers can purchase the RF430F5978EVM bundle. This bundle helps users evaluate the key features of RF430F5978 MCU: 3D LF wake-up and trigger function, passive battery-less transponder operation, and resonant trimming.

The bundle includes a USB plug-in LF trigger module (MRD2EVM micro reader), RF430F5978 MCU evaluation board (RF430F5978EVM), AP434R01 access point, and 3D LF antenna. Using this EVM bundle, a typical demo application can be set up in which the RF430F5978 captures data from multiple sensors over a period of time and, after it is triggered by the LF wake-up trigger from the reader, it transmits the collected data to the access point via RF link. This data is then sent on to the included host GUI to visualize the data curve and position of the object.

Features and benefits of the RF430F5978 MCU:

- Reduces power consumption by allowing the shutdown of the RF radio and quick startup with the LF wake-up function, thus significantly extending battery life.
- Tracks its position and distance (within ±5 cm) relative to the 3D LF transponder using RSSI (return signal strength indicator) within a 4-m radius of the reader's LF trigger.
- Protects sensitive data and prevents signal interference with the AES security coprocessor that allows data encryption for product authentication and secure access control.
- Provides flexible customization at ultra-low power with the programmable MSP430 core.
- Accommodates a wide range of regional Sub-1GHz frequencies from 300 to 950 MHz.
- Reduces board size and cost with the integration of several key functions into a single MCU.
- Works with complementary TI components, such as TPS62163 and TPS62082 power management ICs, the SimpleLink™ Wi-Fi® CC3100, and bq24040 IC.

2 Related Documentation from Texas Instruments

The primary sources of RF430 information are the device-specific data sheets and user's guides. The most current information is found at the following links:

www.ti.com/product/RF430F5978
www.ti.com/msp430
www.ti.com/product/cc1101
www.ti.com/tool/RF430F5978EVM
www.ti.com/tool/smartrftm-studio

SimpleLink, SmartRF are trademarks of Texas Instruments.
Wi-Fi is a registered trademark of Wi-Fi Alliance.

Copyright © 2014, Texas Instruments Incorporated

3 RF430F5978 Demo Kit Overview

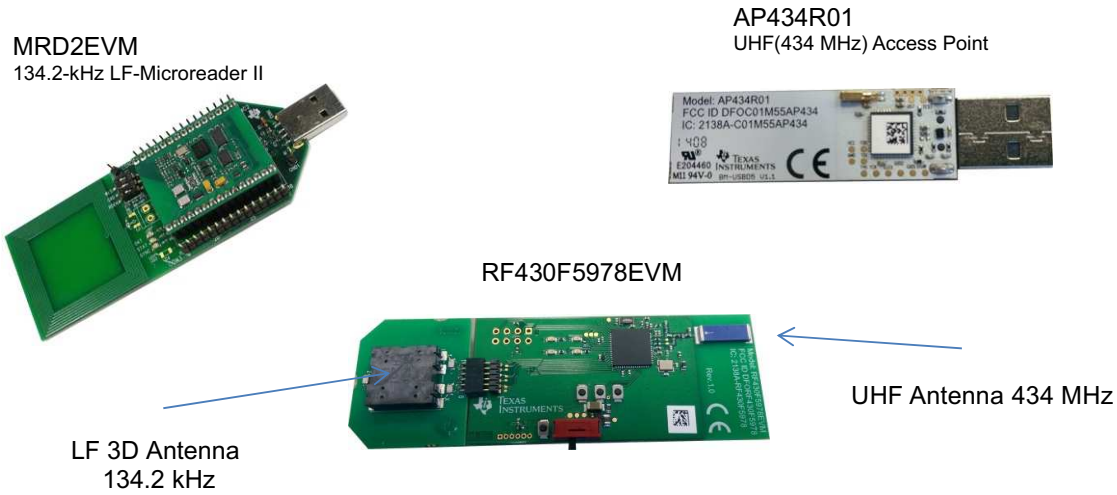

Figure 1. RF430F5978EVM Kit

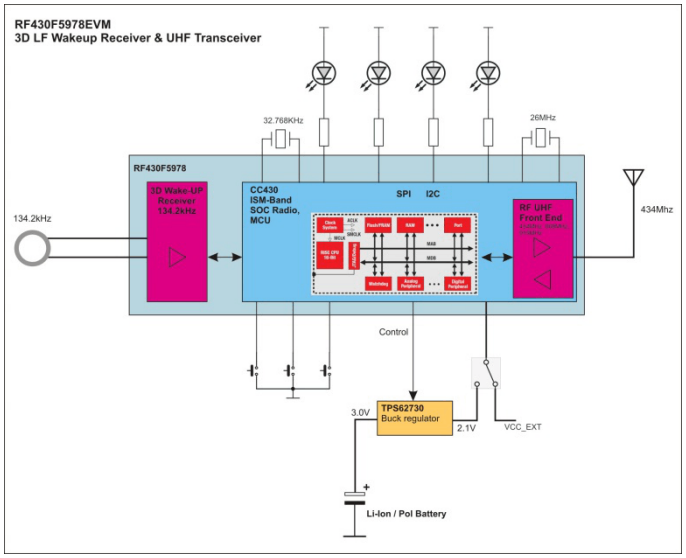

Figure 2. RF430F5978EVM Block Diagram

4 Introduction

The RF430F5978EVM, including the user software, is a complete evaluation platform to evaluate the key features of RF430F5978:

- 3D LF long-range trigger and wake-up function
- Passive batteryless transponder communication
- Resonant trimming

In a typical sequence, the MRD2EVM LF transmitter sends a 64-bit wake pattern and, as soon as the RF430F5978EVM board is within the supply range (typically 2 m with the components in this kit but can reach up to 10 m with an LF power transmitter) and detects a valid wake pattern, then activates the microcontroller. The microcontroller then measures the receive signal strength (RSSI) of all three axes on the 3D LF antenna, interprets the orientation and distance of the device, measures the temperature, battery, and system voltage, and sends the information through the onboard UHF transceiver to the AP434R01 access point.

Copyright © 2014, Texas Instruments Incorporated

The returned data is visualized by the user software GUI, which shows the signal strength on all three axes, the temperature, and the supply voltage logging data (see Table 1 and Figure 3).

Table 1. GUI Tabs

Tab	Name	Contents and Functions
1	LF Wake Up Mode	Demonstrate LF Wake Up Mode with UHF response
2	LF ANT Trimming	LF Antenna Trimming function
3	Test	Hardware Function test
4	AES Transponder	AES Transponder function User Terminal
5	About	Software version and User Guide of RF430F5978EVM

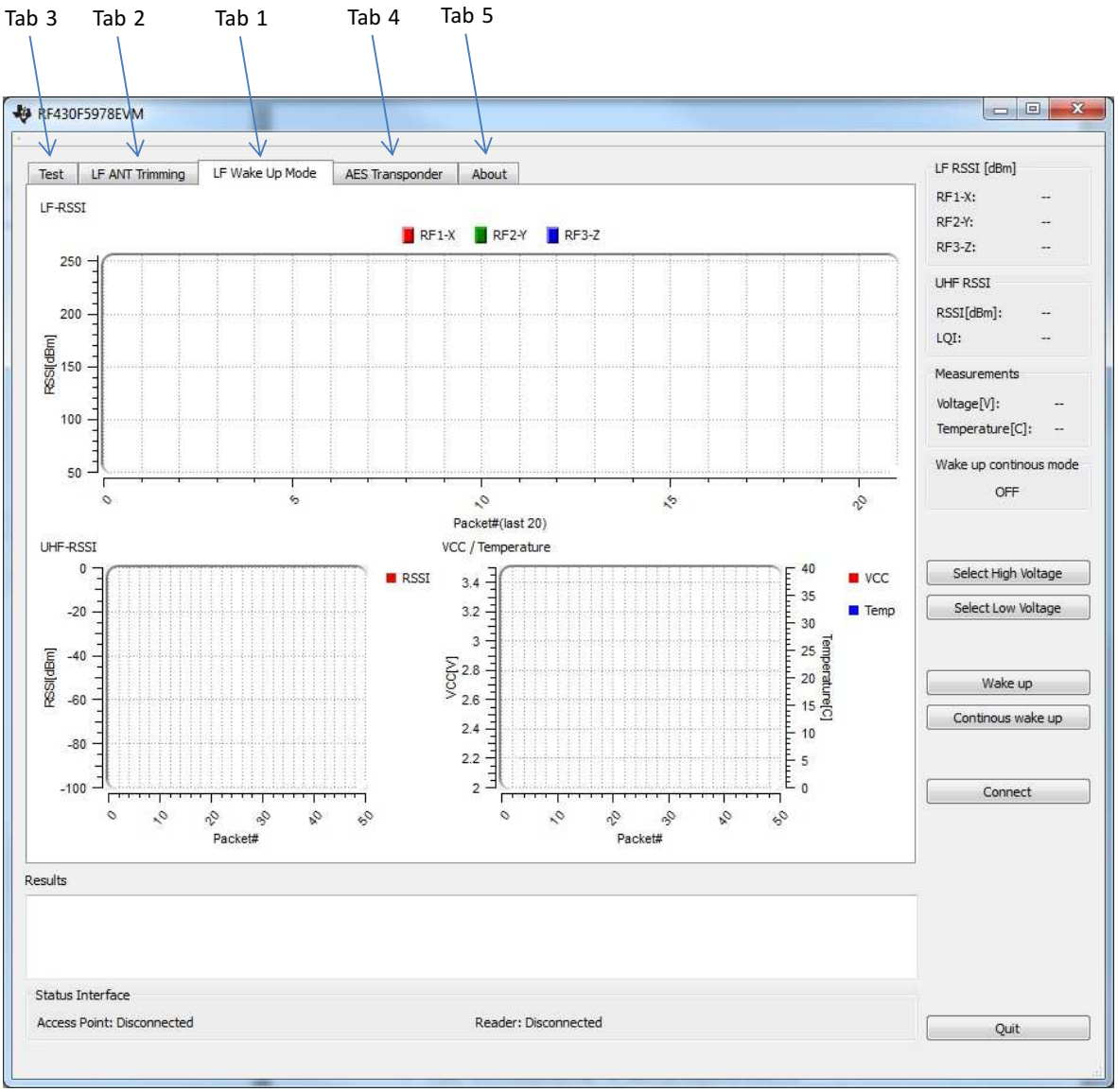

Figure 3. RF430F5978EVM GUI

Copyright © 2014, Texas Instruments Incorporated

5 Kit Contents

- MRD2EVM module
- RF430F5978EVM module
- AP434R01 module
- JTAG-SBW adapter module
- RF430F5978EVM quick start guide
- 1.27 4-pin connector

Figure 4. RF430F5978EVM Package

For complete ordering information, see the TI web site at www.ti.com/tool/RF430F5978EVM.

6 Required Equipment

The following equipment is required to operate the RF430F5978EVM:

- A PC running the Windows 7 operating system
- A lithium coin battery: 3 V, 20 mm, CR2032
  - **Note:** Use only Panasonic CR2032 lithium battery or equivalent
  - Battery requirements: CR2032 UL recognized component battery
    Voltage: 3 V, Capacity: 230 mAh (typical data sheet numbers), Minimum Capacity (for 1 hour operation): 5 mAh

7 Software, Driver, and Documentation

The latest software, driver, and user guide are available at www.ti.com/tool/RF430F5978EVM.

1. Download the RF430F5978EVM.EXE installer file to the PC.
2. The installer file includes software, driver, and user guide.
3. Double-click the installer file to install the software package and drivers.
   The default installation location for the demo software is C:\Program Files\RF430F5978EVM.

Copyright © 2014, Texas Instruments Incorporated

8 Set Up RF430F5978EVM Demo

The following steps set up the hardware and sofware to run the default demo:

1. Insert the CR2032 battery in the RF430F5978EVM module as shown in Figure 5.

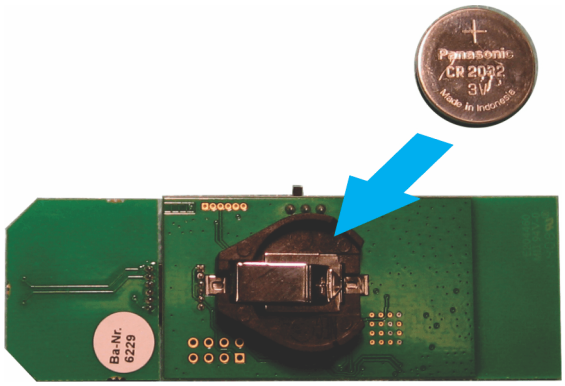

Figure 5. RF430F5978EVM Battery Assembly

2. Connect MRD2 reader and the AP434R01 access point to USB interfaces on the PC (see Figure 6).

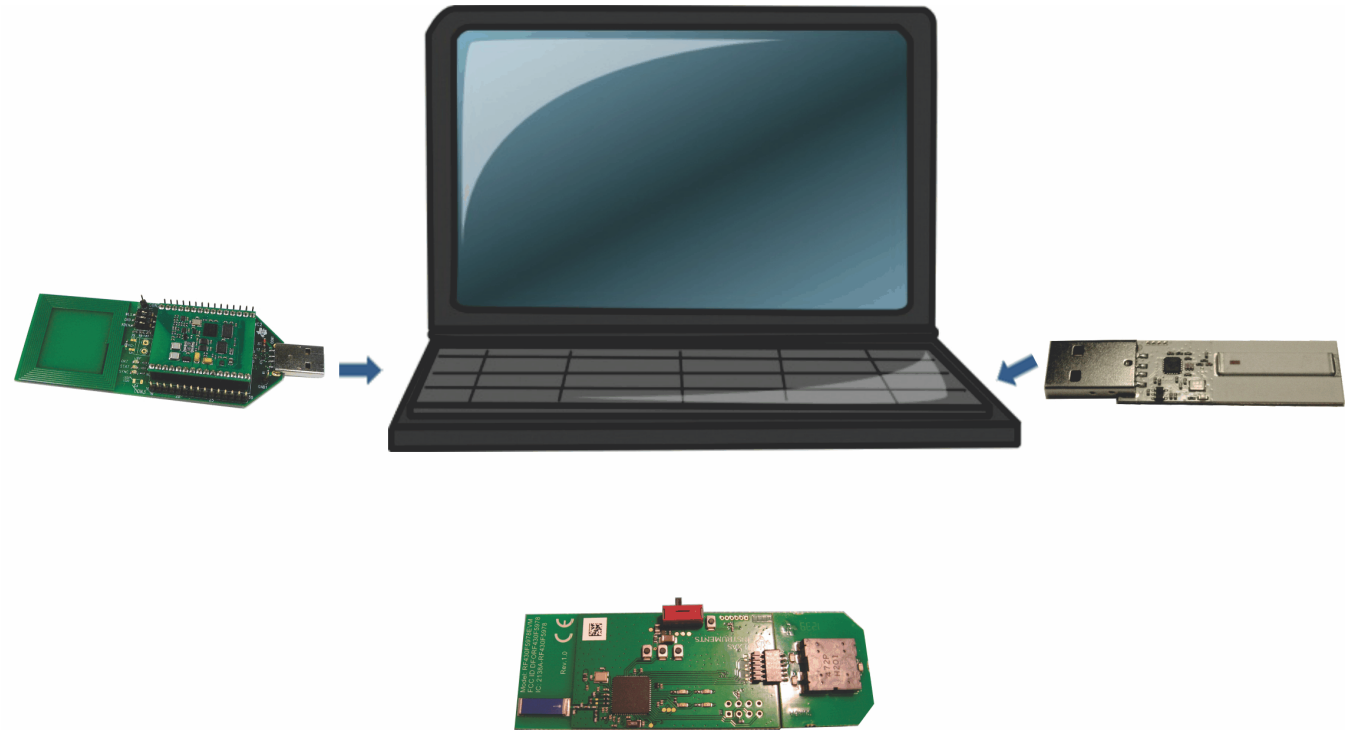

Figure 6. RF430F5978EVM USB Connection

Copyright © 2014, Texas Instruments Incorporated

3. Install the LF-Microreader (MRD II) driver, the 'Microreader II Virtual COM Port' driver.

   The operating system should automatically detect the COM port driver for the LF-Microreader. If you are prompted for the driver, the default installation location is C:\Program Files (x86)\RF430F5978EVM\Driver.

   Driver INF file: MicroreaderII.inf

   Follow the instructions of the operating system to install the driver.

4. Install the AP434R01 UHF access point driver, the 'AP434R01 Virtual COM Port' driver.

   The operating system should automatically detect the COM port driver for theAP434R01. If you are prompted for the driver, the default installation location is C:\Program Files (x86)\RF430F5978EVM\Driver.

   Driver INF file: RF_AP.inf

   Follow the instructions of the operating system to install the driver.

5. Set the power switch on the RF430F5978EVM module to the battery mode (left position) (see Figure 7).

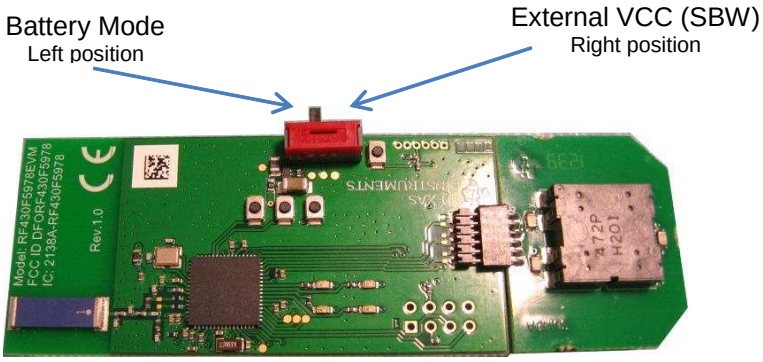

Figure 7. RF430F5978EVM Power Switch

The hardware is now ready to start the demo.

Copyright © 2014, Texas Instruments Incorporated

9 Start the Software

To run the software, click Start → All Programs → RF430F5978EVM → RF430F5978EVM. The LF reader and UHF access point will be automatically detected.

1. Start the software RF430F5978EVM.
2. Click "Connect".
3. Check if the Microreader and USB access point are available (see Figure 8).

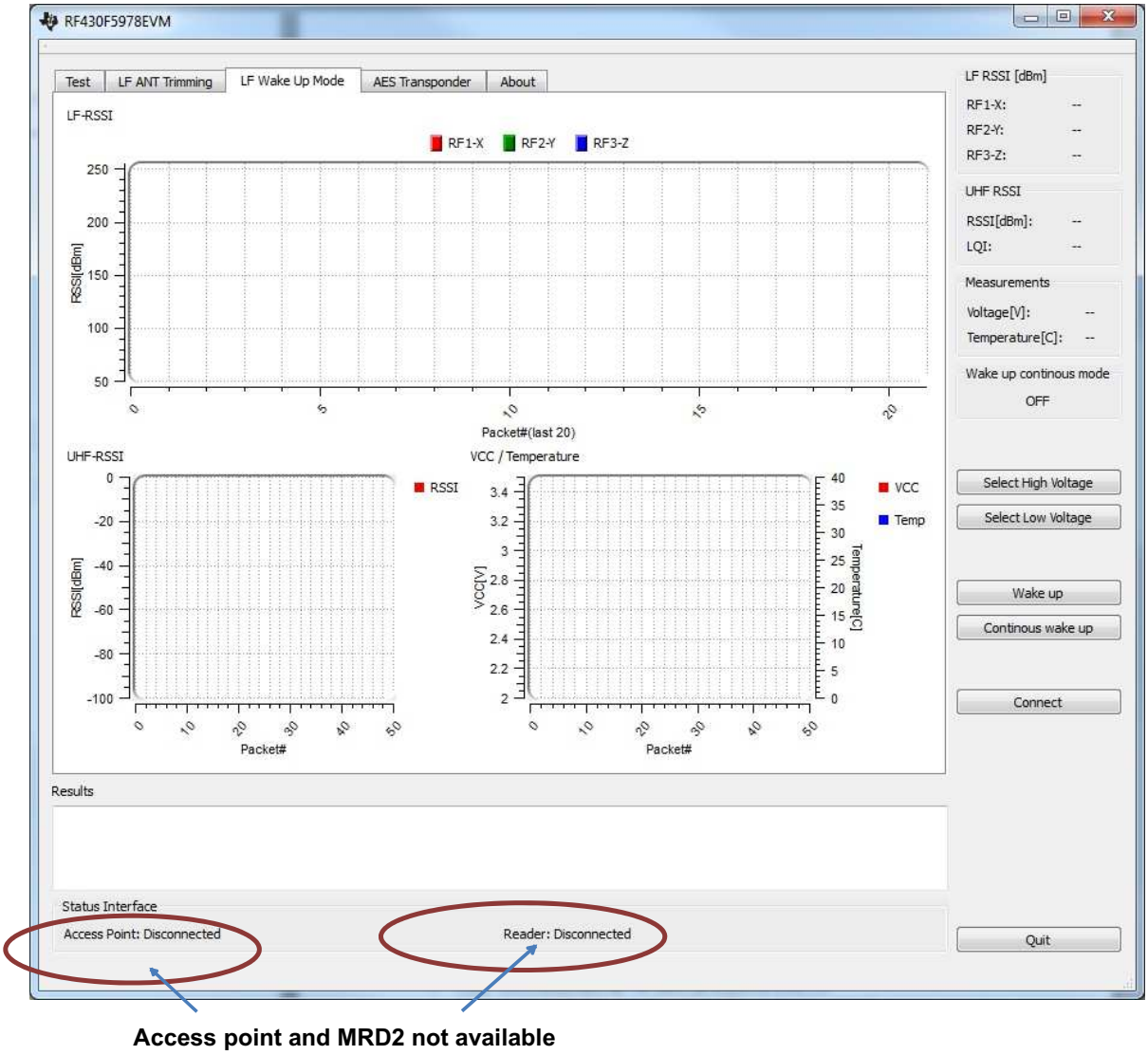

Access point and MRD2 not available

Figure 8. RF430F5978EVM GUI Hardware Status 1

4. If MDR2 and USB Access point not available, ensure that the MRD2 and AP434R01 access point are connected to the PC, and then click "Connect" again.

Copyright © 2014, Texas Instruments Incorporated

5. Check if the Microreader and USB access point are available (see Figure 9).

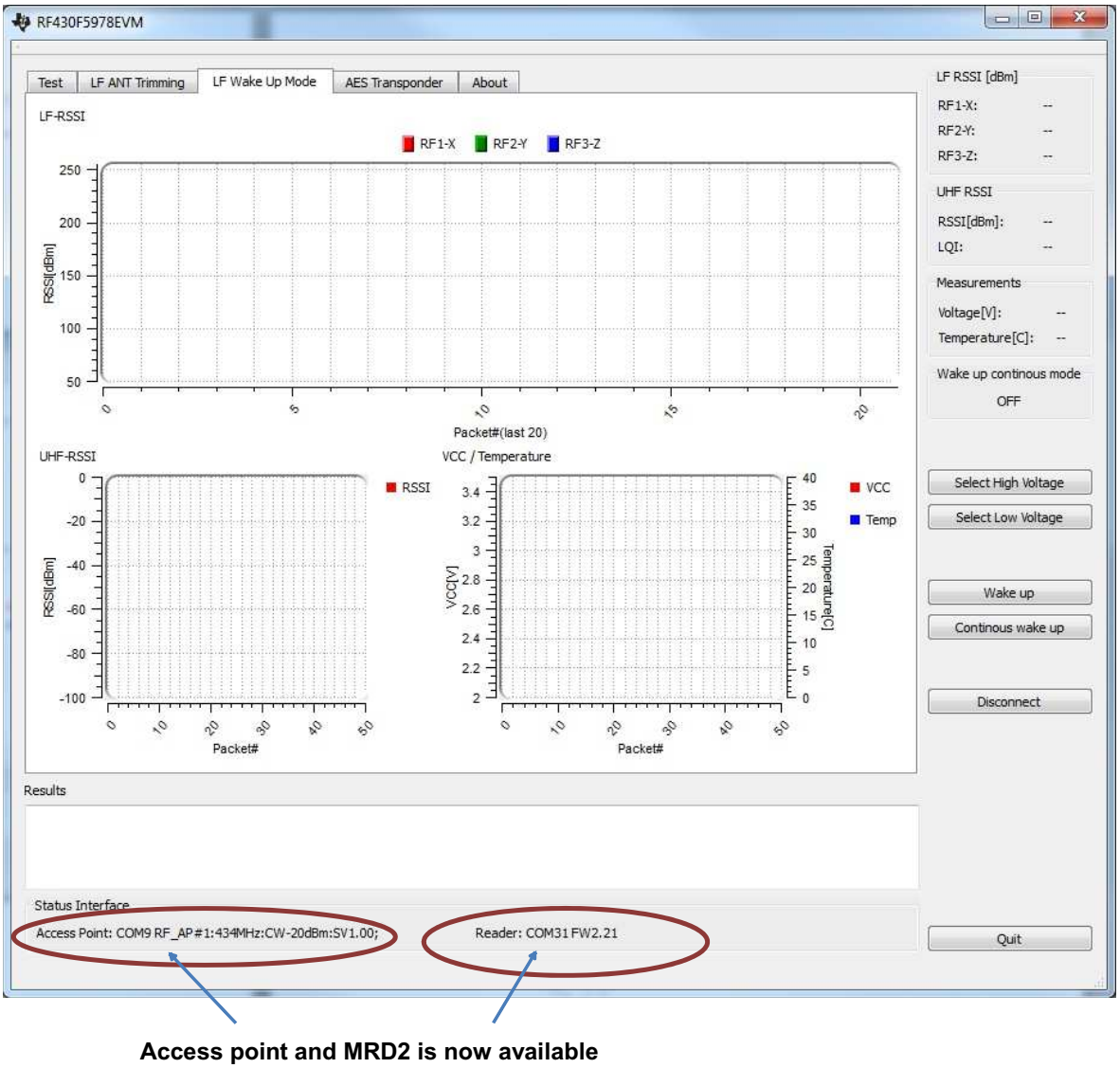

Access point and MRD2 is now available

Figure 9. RF430F5978EVM GUI Hardware Status 2

6. If both are available, the software is ready to start the demo.

Copyright © 2014, Texas Instruments Incorporated

10 Using the LF Wake-Up Mode With UHF Response

The following steps show how to enable complete (bidirectional) LF communication, which means that the MRD2 can send an LF wake pattern and can then receive the UHF response of the RF430F5978EVM module that receives the wake-up signal (see Figure 10).

1. Click "Wake up" button to start the wake-up sequence one time.
2. Click "Continuous wake up" to initiate continuous mode (approximately 2-s cycle time)
3. Click "Continuous wake up" again to stop the continuous mode.

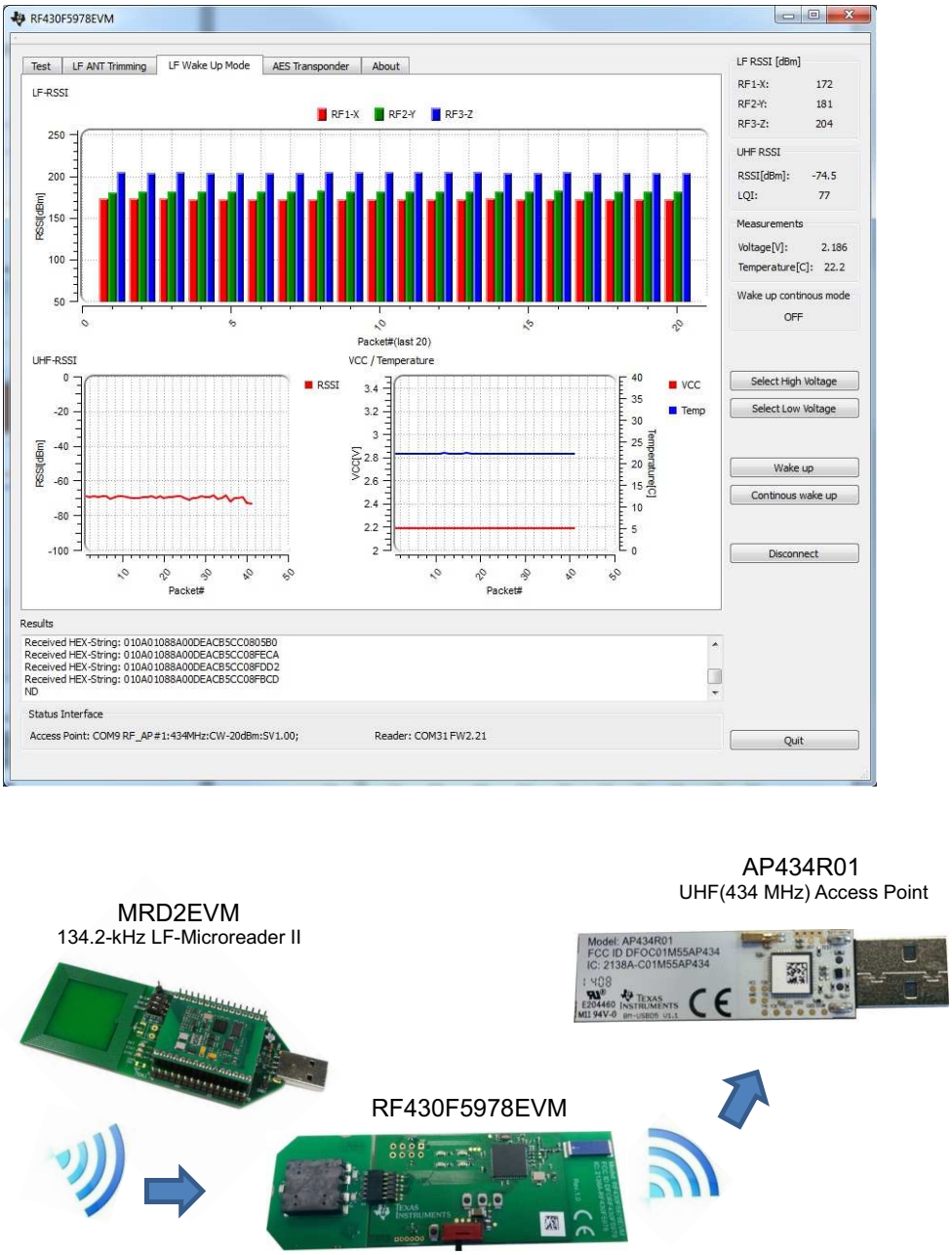

Figure 10. RF430F5978EVM Wakeup Mode Demo 1

Copyright © 2014, Texas Instruments Incorporated

11 LF Wake-Up Mode Tab

Figure 11 shows the LF Wake Up Mode tab. Refer to the following description for more details.

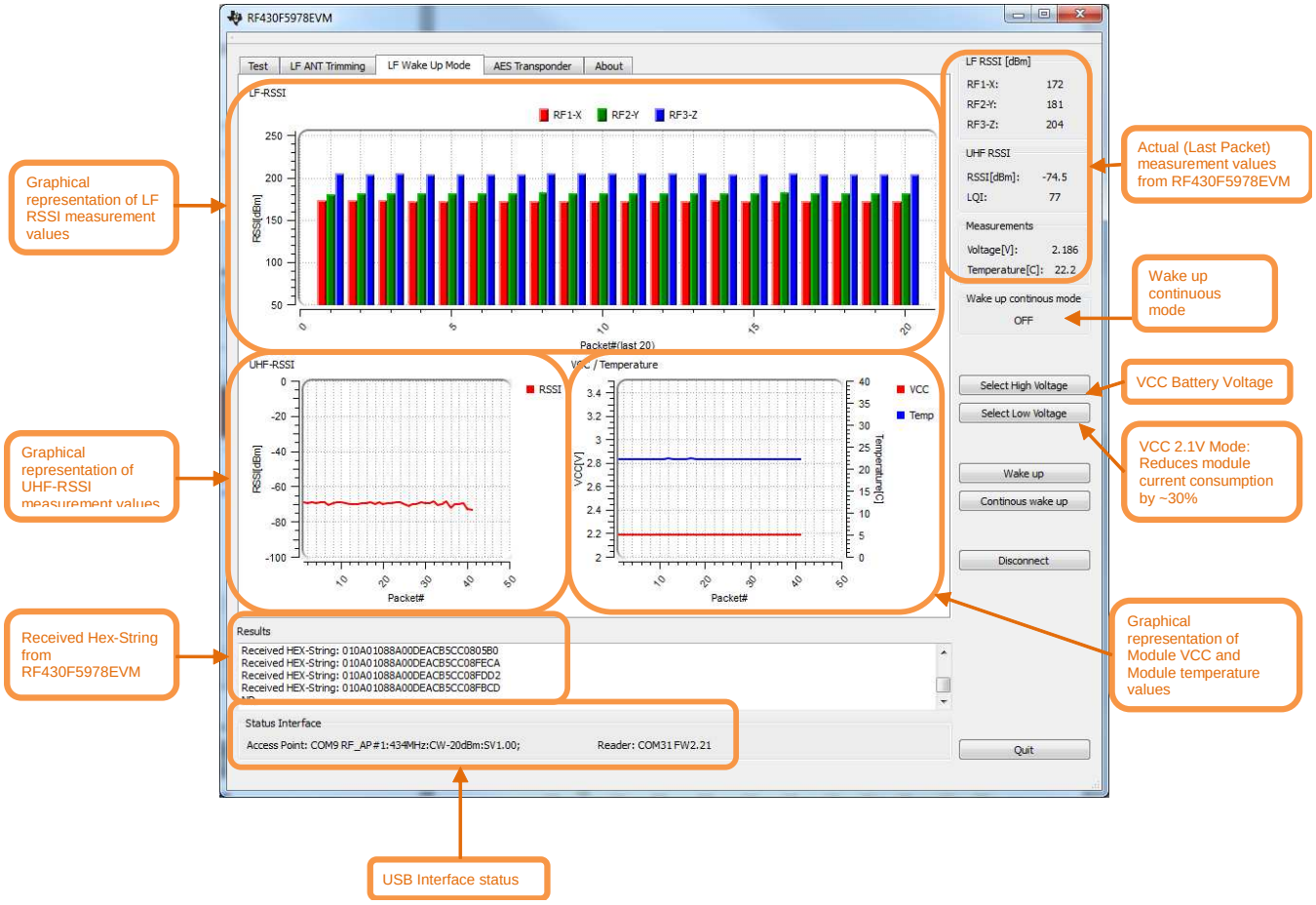

Figure 11. RF430F5978EVM Wakeup Mode Demo 2

1. LF RSSI bars displays the different RSSI (received signal strength indicator) values of the 3D antenna (red for x, green for y, blue for z). The max value is 255 dBm. The RSSI value of each RF430F5978 antenna axis depends on the RF430F5978 module position and orientation relative to the LF trigger (MRD2). Continuous mode displays the last 20 packets.

2. UHF RSSI scatter xy graph displays the RSSI value of the received UHF (434 MHz) signal. Continuous mode displays the last 50 packets.

Copyright © 2014, Texas Instruments Incorporated

3. Received data on UHF antenna at wake up mode. If no data is available, reports "ND".

Table 2. Received Data Examples

Content	*Start*	*Length*	*Command*	*Voltage (mV)*	*Temperature (ºC)*	*LF RSSI X (dBm)*	*LF RSSI Y (dBm)*	*LF RSSI Z (dBm)*	*LF Wake*	*UHF RSSI*[1]	*UHF LQI*[2]	*EOL*
Example:	01	0A	01	087E	00EA	A3	AD	CA	08	24	B0	0D
Explanation:	Start of Telegram	Without (start, length, Cmd and EOL) byte	Response always Null Byte	Representing voltage 0x087E => 2174 mV	Representing temperature 0x00EA => 23.4°C	Representing LF RSSI X 0xA3 => 163 dBm	Representing LF RSSI Y 0xAD => 173 dBm	Representing LF RSSI Y 0xCA => 202 dBm	Which wake up occurred 8 => Wake A	Representing UHF RSSI 0x24 => -54 dBm	Representing UHF LQI EST 0xB0 & 0x7F => 48	EOL End of Message
	1 byte	1 byte	1 byte	2 byte	2 byte	1 byte	1 byte	1 byte	1 byte	1 byte	1 byte	1byte

(1) UHF RSSI

The UHF RSSI value read from the RSSI status register is a 2s-complement number. The following procedure can be used to convert the RSSI reading to an absolute power level (RSSI_dBm)

1. Read the RSSI status register
2. Convert the reading from a hexadecimal number to a decimal number (RSSI_dec)
3. If RSSI_dec ≥ 128 then RSSI_dBm = (RSSI_dec – 256)/2 – RSSI_offset
4. If RSSI_dec < 128 then RSSI_dBm = (RSSI_dec)/2 – RSSI_offset

Refer to the device-specific data sheet for typical RSSI offset values and for typical RSSI values vs input power levels at various frequencies.

The RF430F5978EVM power condition meets following regulations:

FCC 5.231

ETSSI 300 220

ETSSI 300 330

ETSSI 301 489

(2) Link Quality Indicator (LQI)

The Link Quality Indicator is a metric of the current quality of the received signal. If PKTCTRL1.APPEND_STATUS is enabled, the value is automatically added to the last byte appended after the payload. The value can also be read from the LQI status register. The LQI gives an estimate of how easily a received signal can be demodulated by accumulating the magnitude of the error between ideal constellations and the received signal over the 64 symbols immediately following the sync word. LQI is best used as a relative measurement of the link quality (a low value indicates a better link than what a high value does), because the value is dependent on the modulation format. (Mask out bit7, as LQI = bit6 to bit0)

4. USB Interface status displays the status of USB connection Access point and MRD2.

- Access Point:
  - Virtual com port, module serial number, frequency band, CW PA, firmware version
  - Not found: No access point available
- Reader (MRD2) :
  - Virtual com port, firmware version
  - Not found: No Micro Reader 2 available

5. Temperature and VCC graphical display

- The red line represents RF430F5978EVM VCC module voltage.
- The green line represents RF430F5978EVM module temperature.

Continuous mode displays the last 50 packets.

Copyright © 2014, Texas Instruments Incorporated

12 LF Antenna Trimming Tab

Figure 12 shows the LF Antenna Trimming Tab. Refer to the following description for more details.

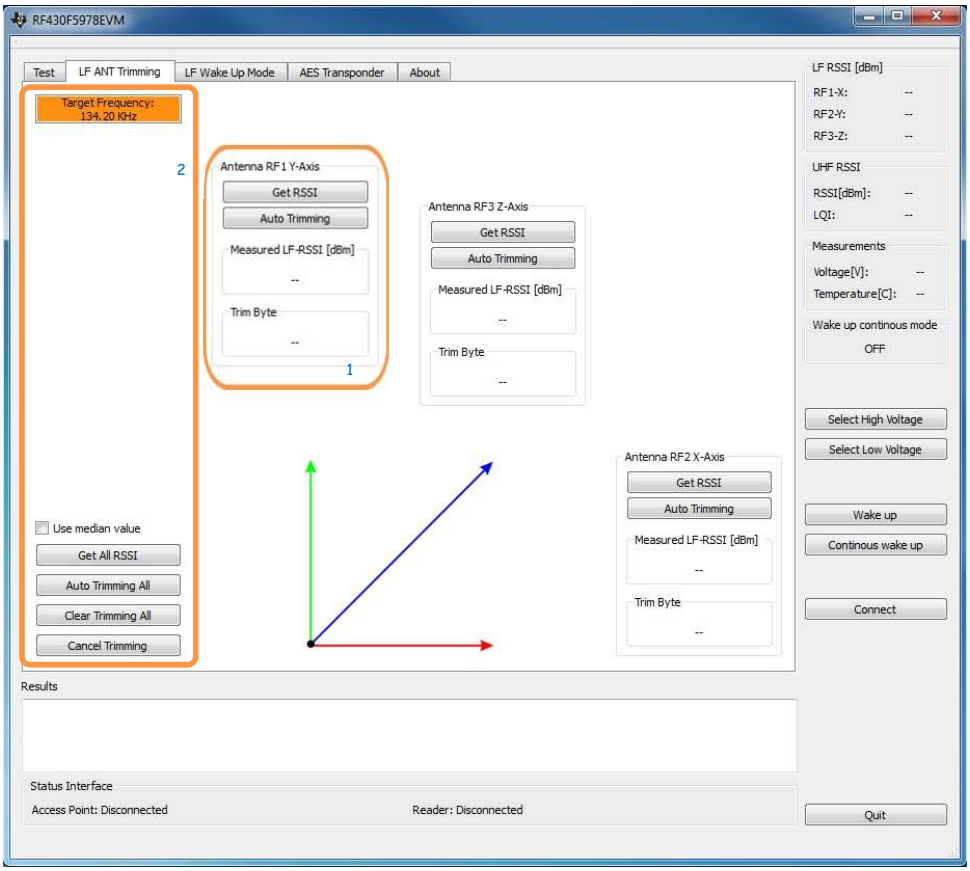

Figure 12. RF430F5978EVM LF Antenna Trimming Tab

1. Antenna RFx (x)-Axis

- Get RSSI: Measure LF-RSSI of separate 3D Antennas
- Auto Trimming: Internal cap trimming for separate 3D Antennas
- Measured LF-RSSI: Measured LF-RSSI at MRD2
- Trim Byte: Display the trim byte

2. General Trimming function

- Target Frequency is at 134.2 kHz
- Checkbox "Use median value": The median value build out of 3 measurement values. The trimming is more accurate but the process needs more time.
- Get All RSSI: Measure all LF-RSSI values.
- Auto Trimming All: Internal cap trimming for all 3D Antennas
- Clear Trimming All: Clear all Trimming settings
- Cancel Trimming: Stop Trimming process

Copyright © 2014, Texas Instruments Incorporated

13 Test Tab

Figure 13 shows the hardware Test tab. Refer to the following description for more details.

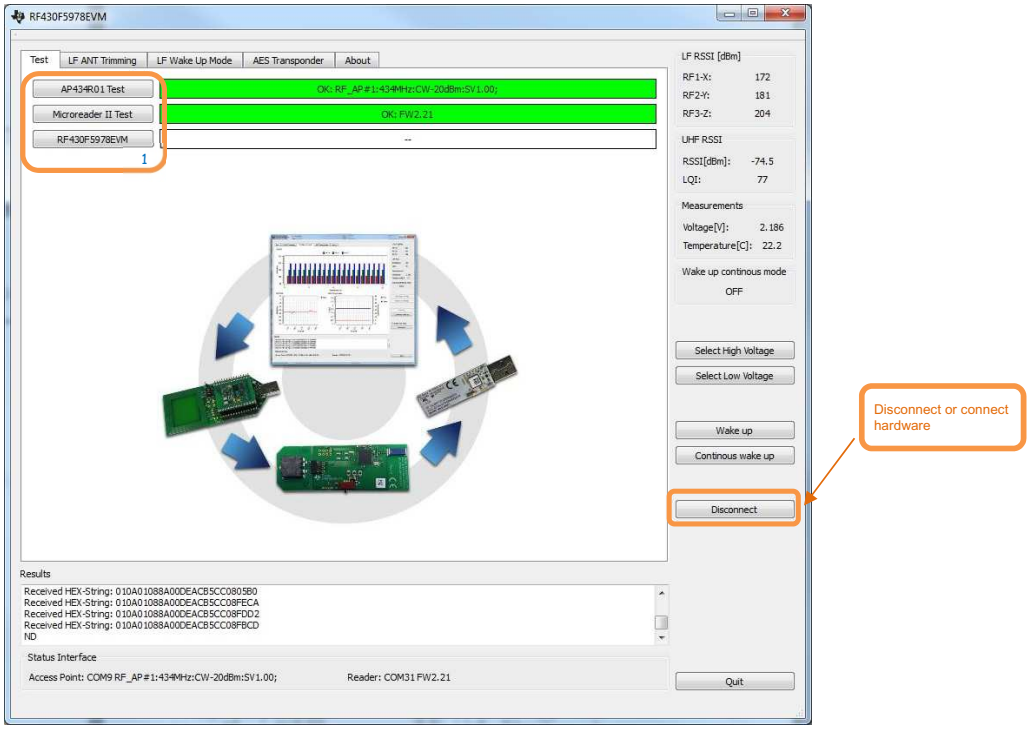

Figure 13. RF430F5978EVM Hardware Test Tab

AP434R01 Test

Hardware test "Access point"

Status Display:

Green indicates that the status of the USB connection to the access point is OK. The virtual COM port, module serial number, frequency band, CW PA, and firmware version are reported.

Red indicates that no access point is available. Check the USB connection.

Microreader II Test

Hardware test "MRD2"

Status Display:

Green indicates that the status of the USB connection to the MRD2 is OK. The virtual COM port and firmware version are reported.

Red indicates that no MRD2 module is available. Check the USB connection.

RF430F5978EVM

Hardware test "RF430F5978EVM"

Status Display:

Green indicates that RF430F5978EVM LF and UHF communication are OK. The module name, serial number, and firmware version are reported.

Red indicates that communication with the RF430F5978EVM module is not possible.

Possible errors:

No Battery

Power Switch not in Battery mode

3D Antenna not connected

Copyright © 2014, Texas Instruments Incorporated

14 AES Transponder User Interface

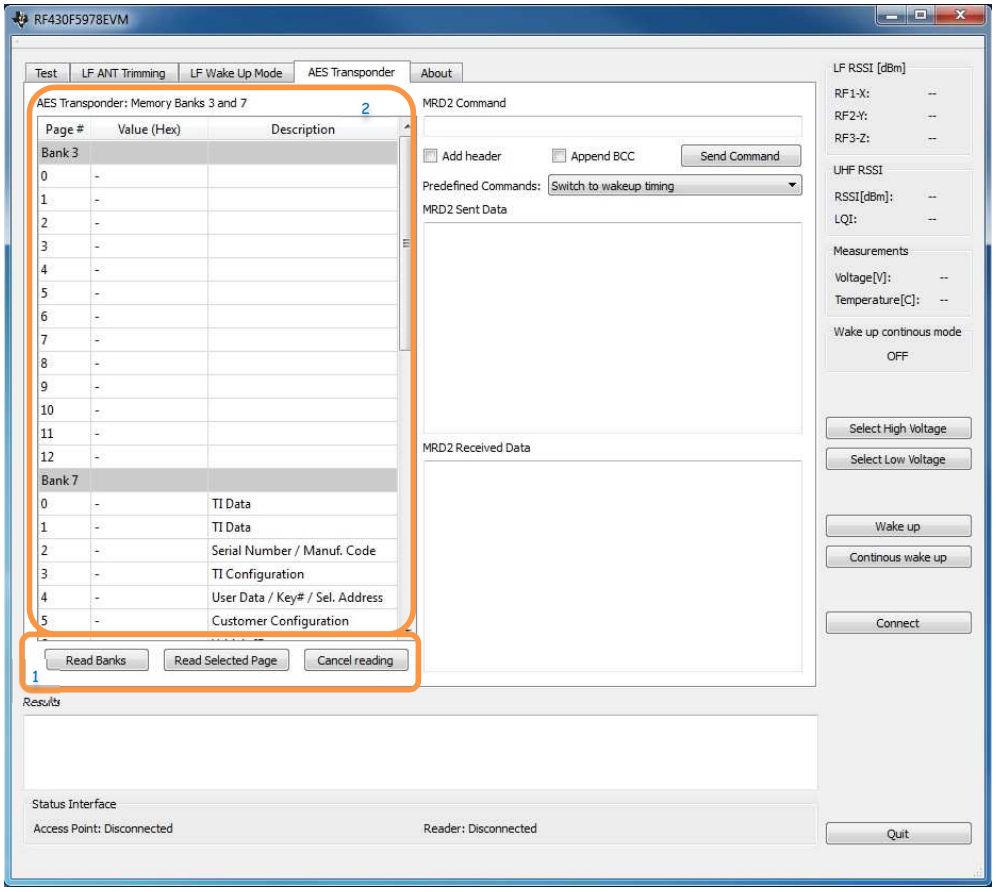

Figure 14. RF430F5978EVM AES Transponder Tab 1

1. Transponder Bank 3/7 and Pages:

Read Banks: Read out complete Bank 3 and Bank 7 Pages from RF430F5978EVM module

Read Selected Page: Read out the selected page from RF430F5978EVM module

Cancel reading: Cancel the read operation

2. Transponder Bank 3/7 and Pages table:

Display the bank 3/7 and pages results

Copyright © 2014, Texas Instruments Incorporated

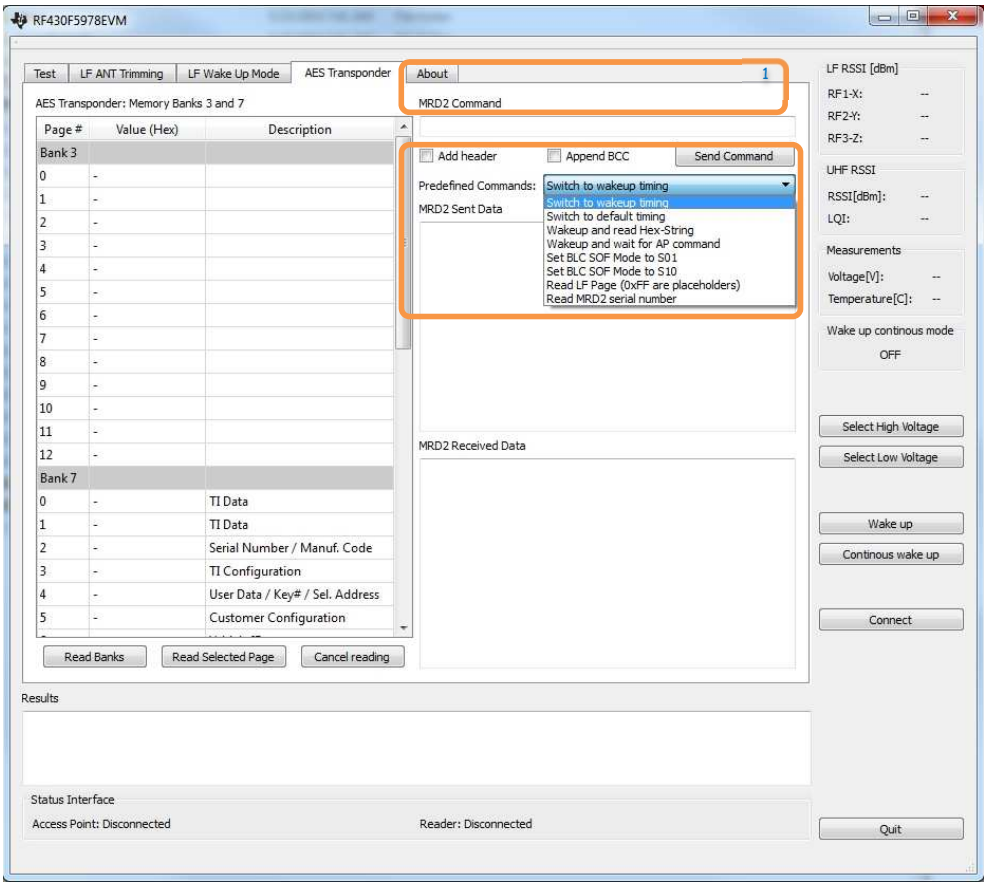

Figure 15. RF430F5978EVM AES Transponder Tab 2

1. MRD2 Command:

User input interface for setup direct hex commands

Example: Set default timing "BLC (Automotive) Timing (Command 0x0D)"
01 12 83 0D 00 AA 01 CC 00 AA 00 E6 00 AA 01 5E 00 AA 02 44 AE

Detailed Information in Microreader RI-STU-MRD2 Reference Guide (scbu049). (See Section 6.4.3.14)

2. Predefined Commands:

Switch to wake up timing: "Special wake up timing (Command 0x0D)"
01 12 83 0D 00 AA 03 E8 00 AA 00 FA 00 AA 02 8A 00 AA 27 10 32

SOFoff	170 µs
SOFon	1000 µs
toffLow	170 µs
tonLow	250 µs
toffHigh	170 µs
tonHigh	650 µs
EOFoff	170 µs
EOFon	10000 µs

Switch to default timing: "BLC (Automotive) Timing (Command 0x0D)"
01 12 83 0D 00 AA 01 CC 00 AA 00 E6 00 AA 01 5E 00 AA 02 44 AE

Copyright © 2014, Texas Instruments Incorporated

Wakeup and read Hex-String: "Send wakeup pattern A" Send Command:
01 08 C8 A0 00 00 01 08 48 0D 2C

Receive data: 01 02 20 00 22 (Example)

For detailed information, see the *RF430F59xx Family User's Guide* (SLAU378) in the section "Low-Frequency Wake-Up Receiver".

Wakeup and wait for AP command: "Send wakeup pattern A and setup the RF430F5978EVM module at UHF interface to Receive Mode"
01 08 C8 A0 00 00 01 08 88 0D EC

The RF430F5978EVM module is waiting for commands from the UHF Access point

Now the user has the possibility to communicate with own UHF – commands

Set BLC SOF Mode to S01: "Setup Default Start of Frame HDX+" 01 03 83 25 01 A4

For detailed information, see the *Microreader RI-STU-MRD2 Reference Guide* (SCBU049).

Set BLC SOF Mode to S10: "Setup Start of Frame Burst length coding" 01 03 83 25 02 A7

For detailed information, see the *RF430F59xx Family User's Guide* (SLAU378) in the section "Low-Frequency Wake-Up Receiver".

Read LF Page: "Read Transponder Bank and page" Example: Read Bank 3 / Page 0

Send command: 01 09 C8 A0 00 00 32 10 B0 00 0E FD

Receive data: 01 10 00 80 7E 00 00 00 00 00 00 00 00 00 B1 00 6B 2F 1B

For detailed information, see the *RF430F59xx Family User's Guide* (SLAU378) in the section "LF Passive Mode Downlink Protocols".

Read MRD2 serial number: "Read the serial number of Microreader 2"

Send command: 01 02 83 03 82

Receive data: 01 08 25 F8 98 46 17 00 17 00 0B (Example)

For detailed information, see the *Microreader RI-STU-MRD2 Reference Guide* (SCBU049).

- **Add header:** Calculate the byte length and add after the start byte

For detailed information, see the *Microreader RI-STU-MRD2 Reference Guide* (SCBU049).

- **Append BCC:** The BCC Field is a one-byte value of the Longitudinal Redundancy Check calculation (XORed bytes) for the preceding message. The calculation is performed over whole command excluding the Start Byte.

For detailed information, see the *Microreader RI-STU-MRD2 Reference Guide* (SCBU049) in the section "BCC: Block Check Character".

Copyright © 2014, Texas Instruments Incorporated

15 UHF Configuration Settings

Deviation	=	31.738281
Base frequency	=	433.92 MHz
Carrier frequency	=	433.92 MHz
Channel number	=	0
Modulated	=	true
Modulation format	=	2-GFSK
Manchester enable	=	false
Sync word qualifier mode	=	30/32 sync word bits detected
Preamble count	=	4
Channel spacing	=	199.951172 kHz
Data rate	=	76.767 kBaud
RX filter BW	=	232.142857 kHz
Data format	=	Normal mode
CRC enable	=	true
Whitening	=	false
Device address	=	0
Address config	=	No address check
CRC autoflush	=	false
PA ramping	=	false
TX power	=	-20 dBm[(1)]

(1) RF430F5978EVM power condition meets the FCC 5.231 requirements

16 Configuration Software for UHF block

The RF430F5978 can be configured by using the SmartRF™ Studio software (SWRC046). Because RF430F5978 selection is not available, CC430 and CC1101 settings must be selected in SmartRF Studio. The SmartRF Studio software is highly recommended for obtaining optimum register settings, and for evaluating performance and functionality.

For information on SmartRF Studio, see the web site at http://www.ti.com/tool/smartrftm-studio.

Copyright © 2014, Texas Instruments Incorporated

17 RF430F5978EVM Hardware Description

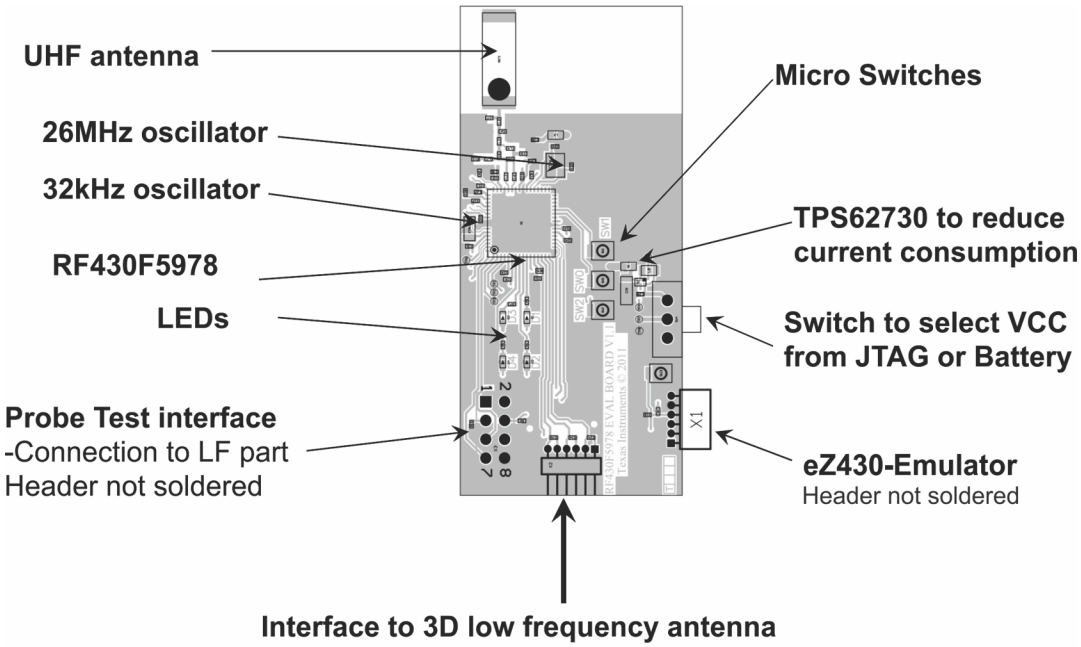

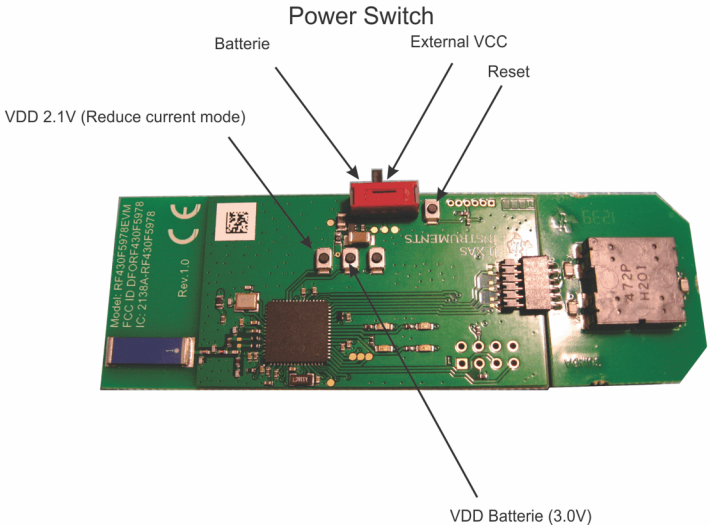

Figure 16. RF430F5978EVM Module

Copyright © 2014, Texas Instruments Incorporated

18 Programming Hardware Interface

18.1 Required Adapter for Programming Interface

The kit includes a JTAG/SBW adapter and a 4-pin connector for firmware change of the RF430F5978EVM module or AP434R01 module.

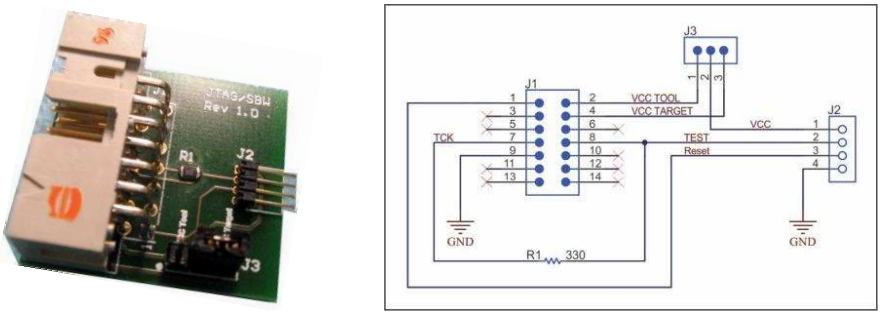

Figure 17. JTAG/SBW Adapter Schematic

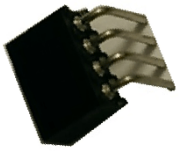

Figure 18. 4-Pin Connector

18.2 Required Equipment to Program the RF430F5978EVM and AP434R01 Modules

The MSP-FET430UIF or MSP-FET Flash Emulation Tool (http://www.ti.com/tool/msp-fet) is needed to program the modules.

Figure 19. MSP-FET430UIF

Figure 20. MSP-FET

Copyright © 2014, Texas Instruments Incorporated

18.3 RF430F5978EVM Hardware Connection for Programming With FET Tool

1. Connect JTAG cable to MSP430 FET UIF or MSP-FET Tool and JTAG/SBW adapter.
2. Connect the 4-pin connector to JTAG/SBW adapter.
3. Connect the 4-pin connector to the RF430F5978 SBW pins on the RF430F5978EVM top layer and place the 4-pins in central position (see Figure 21).

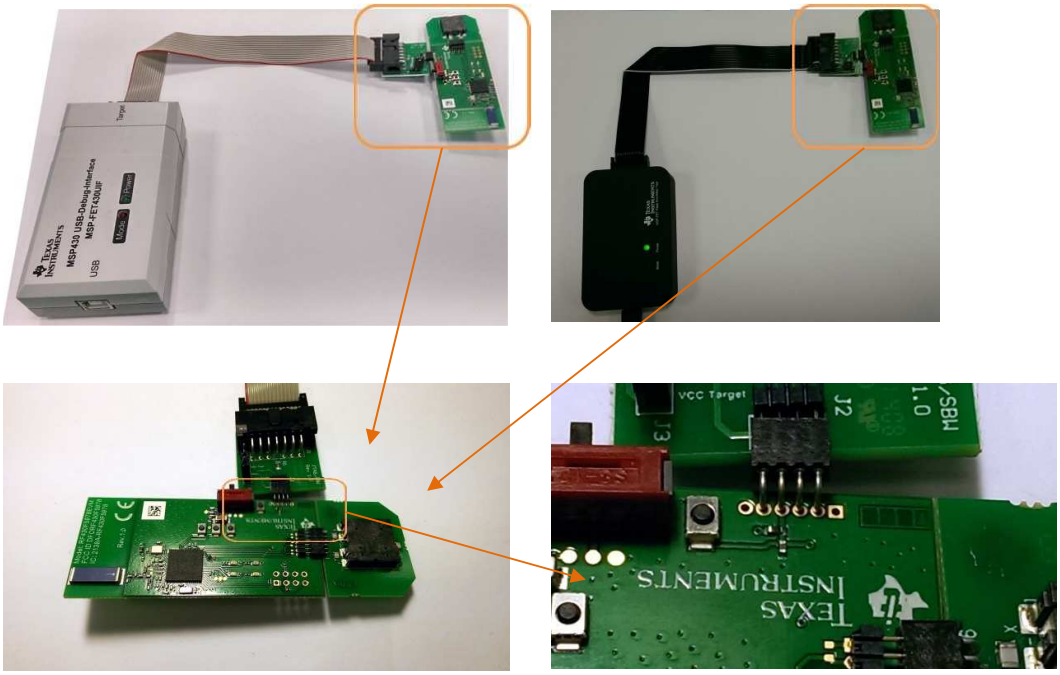

Figure 21. Connect FET Tool to RF430F5978EVM Module

18.4 Access Point AP434R01 hardware based on MSP430F5509 MCU and CC1101 Transceiver

Additional device-specific information can be found on the MSP430 web site (www.ti.com/msp430) and on the Wireless Connectivity web site (www.ti.com/product/cc1101)

Copyright © 2014, Texas Instruments Incorporated

18.5 AP434R01 Hardware Connection for Programming With MSP FET Tool

1. Connect the JTAG cable to the MSP430FETUIF or the MSP-FET tool and JTAG/SBW adapter.
2. Connect the 4-pin connector to the JTAG/SBW adapter.
3. Connect the 4-pin connector to AP434R01 SBW pins from AP434R01 bottom layer (see Figure 22).

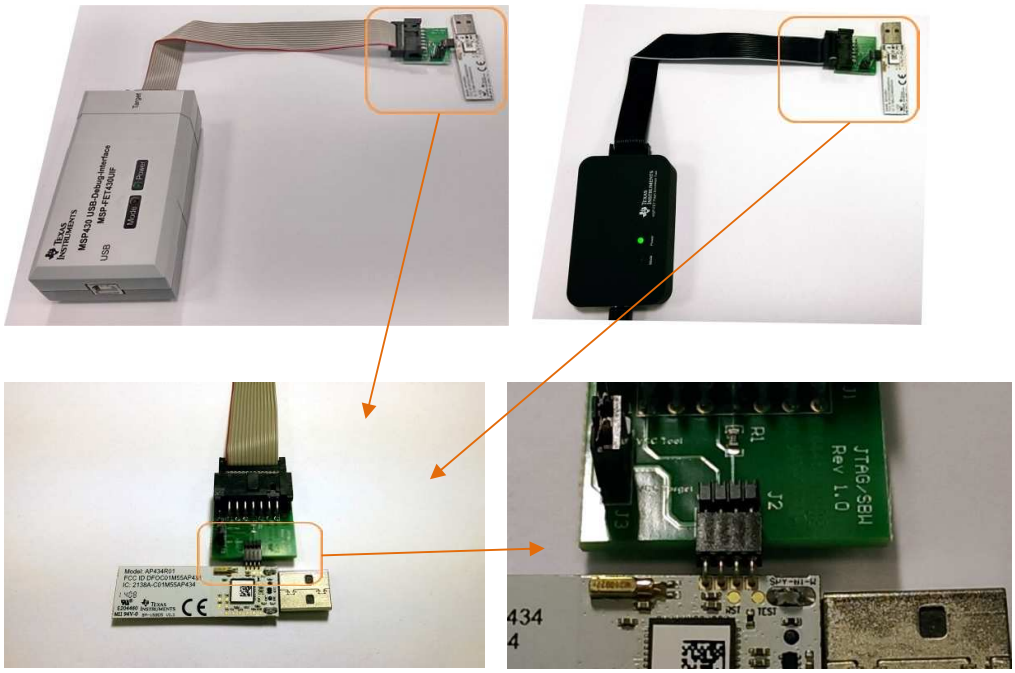

Figure 22. Connect FET Tool to AP434R01 Module

19 Professional Software Development Tools

Code Composer Studio™ IDE (CCSTUDIO)

IAR Embedded Workbench (IAR-KICKSTART)

For more information, see the TI web site at http://www.ti.com/lsds/ti/microcontrollers_16-bit_32-bit/msp/tools_software.page

Copyright © 2014, Texas Instruments Incorporated

20 Schematics

20.1 RF430F5978EVM

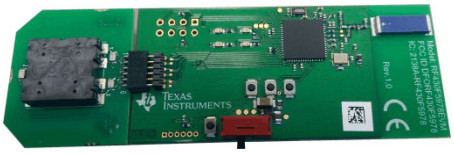

Figure 23. RF430F5978EVM Photo

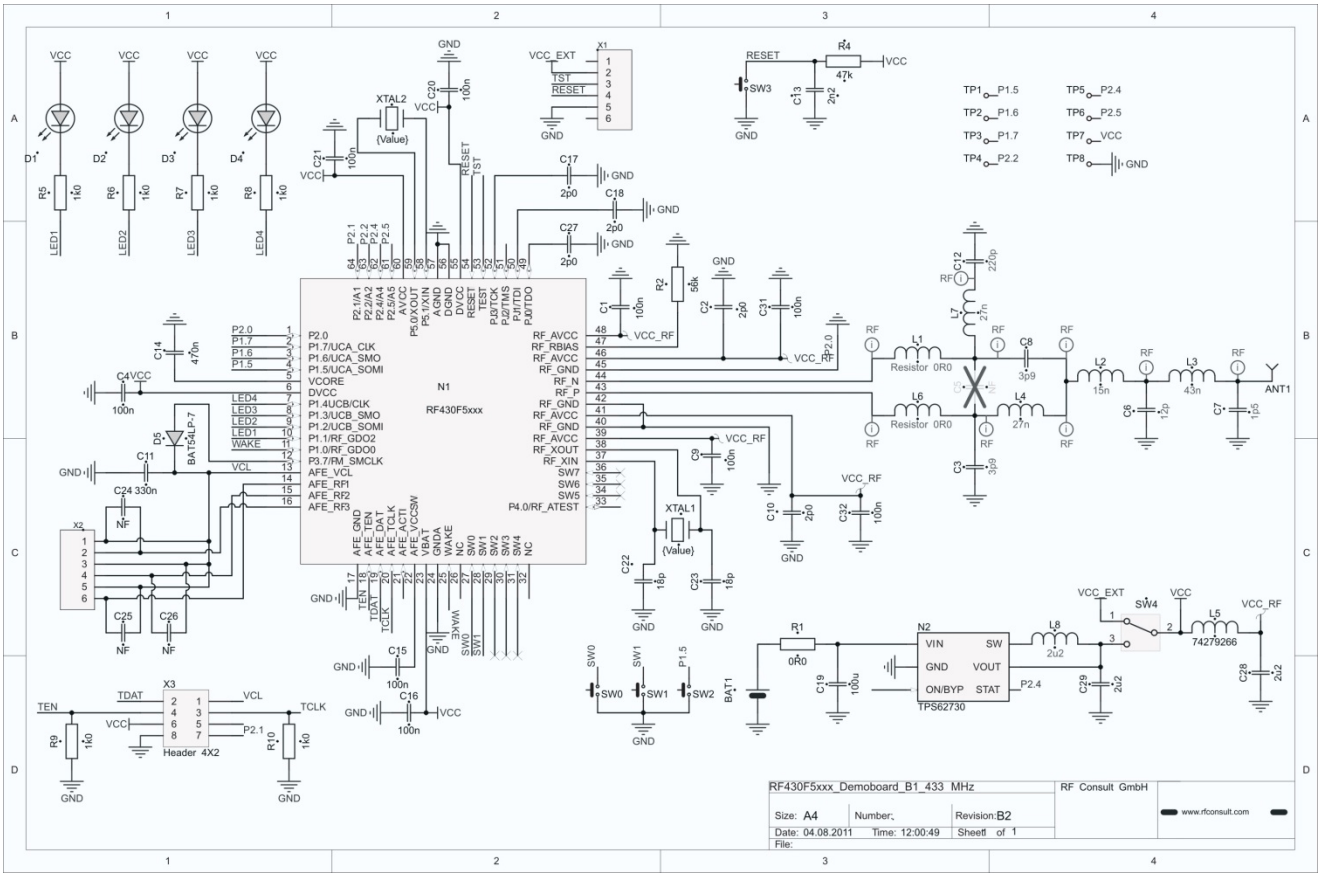

Figure 24. RF430F5978EVM Module Schematic

20.2 LF 3D Antenna

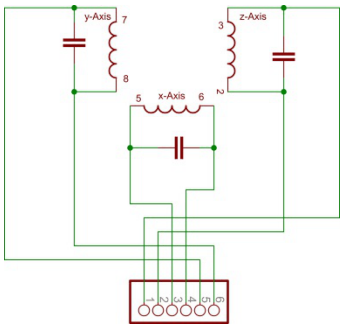

Figure 25. LF 3D Antenna Schematic

Copyright © 2014, Texas Instruments Incorporated

20.3 APA434R01

Figure 26. APA434R01 Photo

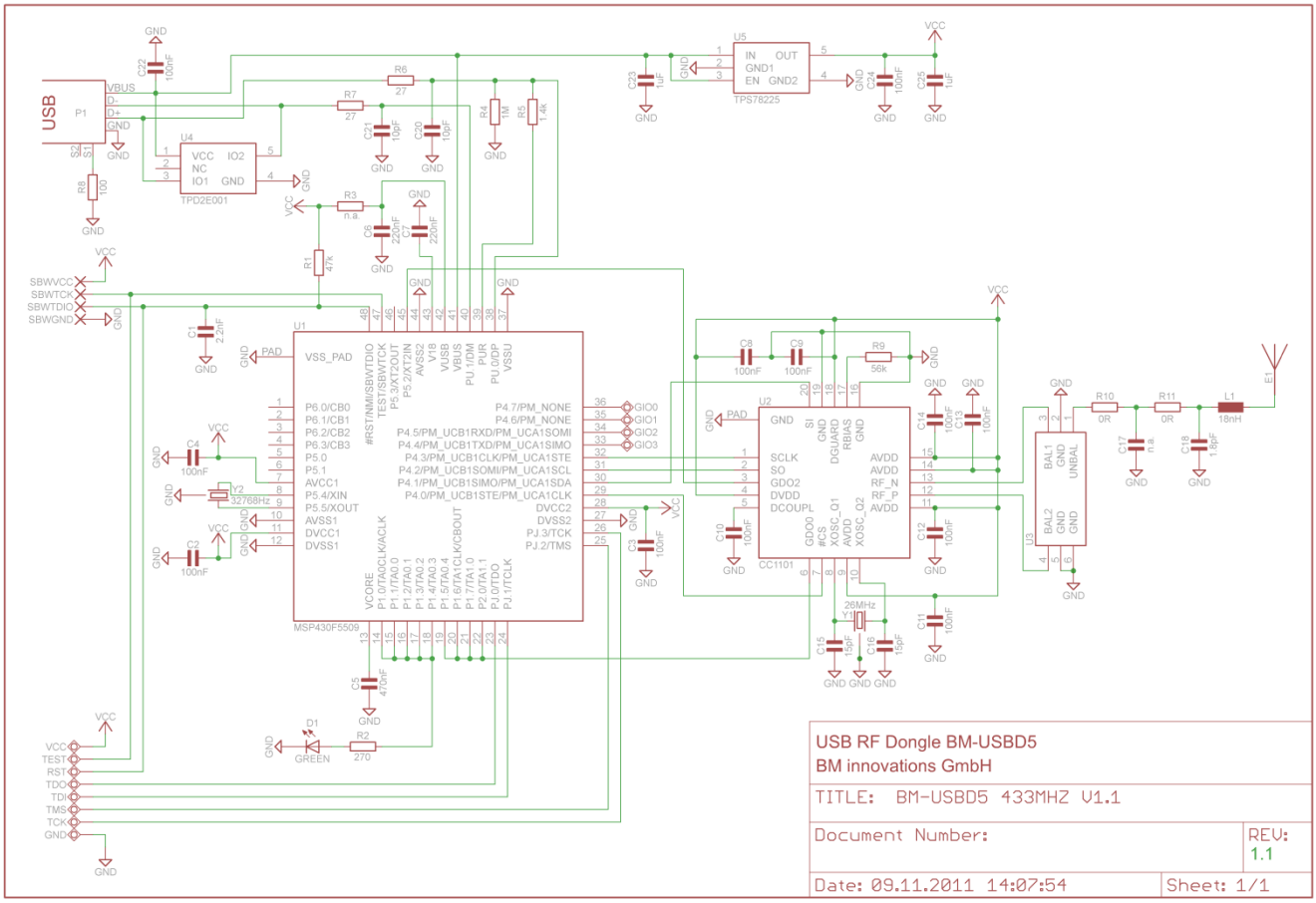

Figure 27. AP434R01 Module Schematic

Copyright © 2014, Texas Instruments Incorporated

20.4 MRD2EVM (Microreader LF 134.2 kHz)

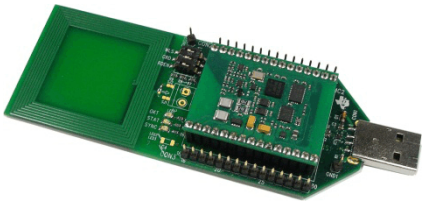

Figure 28. MRD2EVM Photo

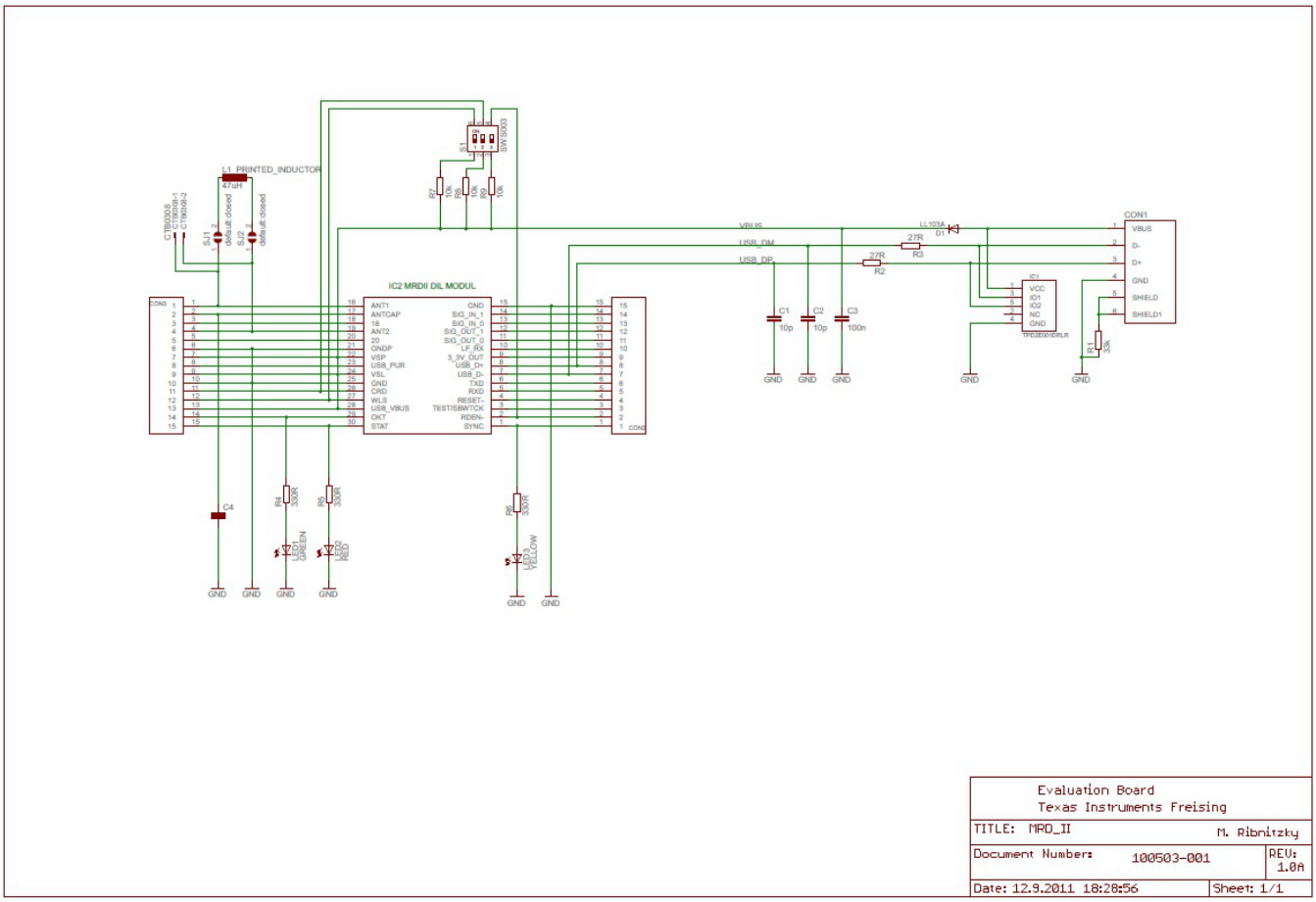

Figure 29. MRD 2 Schematic

For additional documents, such as the Microreader Evaluation Kit description and user guide, go to http://www.ti.com/tool/mrd2evm.

Copyright © 2014, Texas Instruments Incorporated

STANDARD TERMS AND CONDITIONS FOR EVALUATION MODULES

1. *Delivery:* TI delivers TI evaluation boards, kits, or modules, including any accompanying demonstration software, components, or documentation (collectively, an “EVM” or “EVMs”) to the User (“User”) in accordance with the terms and conditions set forth herein. Acceptance of the EVM is expressly subject to the following terms and conditions.

   1.1 EVMs are intended solely for product or software developers for use in a research and development setting to facilitate feasibility evaluation, experimentation, or scientific analysis of TI semiconductors products. EVMs have no direct function and are not finished products. EVMs shall not be directly or indirectly assembled as a part or subassembly in any finished product. For clarification, any software or software tools provided with the EVM (“Software”) shall not be subject to the terms and conditions set forth herein but rather shall be subject to the applicable terms and conditions that accompany such Software

   1.2 EVMs are not intended for consumer or household use. EVMs may not be sold, sublicensed, leased, rented, loaned, assigned, or otherwise distributed for commercial purposes by Users, in whole or in part, or used in any finished product or production system.

2 *Limited Warranty and Related Remedies/Disclaimers*:

   2.1 These terms and conditions do not apply to Software. The warranty, if any, for Software is covered in the applicable Software License Agreement.

   2.2 TI warrants that the TI EVM will conform to TI's published specifications for ninety (90) days after the date TI delivers such EVM to User. Notwithstanding the foregoing, TI shall not be liable for any defects that are caused by neglect, misuse or mistreatment by an entity other than TI, including improper installation or testing, or for any EVMs that have been altered or modified in any way by an entity other than TI. Moreover, TI shall not be liable for any defects that result from User's design, specifications or instructions for such EVMs. Testing and other quality control techniques are used to the extent TI deems necessary or as mandated by government requirements. TI does not test all parameters of each EVM.

   2.3 If any EVM fails to conform to the warranty set forth above, TI's sole liability shall be at its option to repair or replace such EVM, or credit User's account for such EVM. TI's liability under this warranty shall be limited to EVMs that are returned during the warranty period to the address designated by TI and that are determined by TI not to conform to such warranty. If TI elects to repair or replace such EVM, TI shall have a reasonable time to repair such EVM or provide replacements. Repaired EVMs shall be warranted for the remainder of the original warranty period. Replaced EVMs shall be warranted for a new full ninety (90) day warranty period.

3 *Regulatory Notices:*

   3.1 *United States*

      3.1.1 *Notice applicable to EVMs not FCC-Approved:*

      This kit is designed to allow product developers to evaluate electronic components, circuitry, or software associated with the kit to determine whether to incorporate such items in a finished product and software developers to write software applications for use with the end product. This kit is not a finished product and when assembled may not be resold or otherwise marketed unless all required FCC equipment authorizations are first obtained. Operation is subject to the condition that this product not cause harmful interference to licensed radio stations and that this product accept harmful interference. Unless the assembled kit is designed to operate under part 15, part 18 or part 95 of this chapter, the operator of the kit must operate under the authority of an FCC license holder or must secure an experimental authorization under part 5 of this chapter.

      3.1.2 *For EVMs annotated as FCC – FEDERAL COMMUNICATIONS COMMISSION Part 15 Compliant:*

      CAUTION

      This device complies with part 15 of the FCC Rules. Operation is subject to the following two conditions: (1) This device may not cause harmful interference, and (2) this device must accept any interference received, including interference that may cause undesired operation.

      Changes or modifications not expressly approved by the party responsible for compliance could void the user's authority to operate the equipment.

      FCC Interference Statement for Class A EVM devices

      NOTE: This equipment has been tested and found to comply with the limits for a Class A digital device, pursuant to part 15 of the FCC Rules. These limits are designed to provide reasonable protection against harmful interference when the equipment is operated in a commercial environment. This equipment generates, uses, and can radiate radio frequency energy and, if not installed and used in accordance with the instruction manual, may cause harmful interference to radio communications. Operation of this equipment in a residential area is likely to cause harmful interference in which case the user will be required to correct the interference at his own expense.

FCC Interference Statement for Class B EVM devices

NOTE: This equipment has been tested and found to comply with the limits for a Class B digital device, pursuant to part 15 of the FCC Rules. These limits are designed to provide reasonable protection against harmful interference in a residential installation. This equipment generates, uses and can radiate radio frequency energy and, if not installed and used in accordance with the instructions, may cause harmful interference to radio communications. However, there is no guarantee that interference will not occur in a particular installation. If this equipment does cause harmful interference to radio or television reception, which can be determined by turning the equipment off and on, the user is encouraged to try to correct the interference by one or more of the following measures:

- *Reorient or relocate the receiving antenna.*
- *Increase the separation between the equipment and receiver.*
- *Connect the equipment into an outlet on a circuit different from that to which the receiver is connected.*
- *Consult the dealer or an experienced radio/TV technician for help.*

3.2 *Canada*

3.2.1 *For EVMs issued with an Industry Canada Certificate of Conformance to RSS-210*

Concerning EVMs Including Radio Transmitters:

This device complies with Industry Canada license-exempt RSS standard(s). Operation is subject to the following two conditions: (1) this device may not cause interference, and (2) this device must accept any interference, including interference that may cause undesired operation of the device.

Concernant les EVMs avec appareils radio:

Le présent appareil est conforme aux CNR d'Industrie Canada applicables aux appareils radio exempts de licence. L'exploitation est autorisée aux deux conditions suivantes: (1) l'appareil ne doit pas produire de brouillage, et (2) l'utilisateur de l'appareil doit accepter tout brouillage radioélectrique subi, même si le brouillage est susceptible d'en compromettre le fonctionnement.

Concerning EVMs Including Detachable Antennas:

Under Industry Canada regulations, this radio transmitter may only operate using an antenna of a type and maximum (or lesser) gain approved for the transmitter by Industry Canada. To reduce potential radio interference to other users, the antenna type and its gain should be so chosen that the equivalent isotropically radiated power (e.i.r.p.) is not more than that necessary for successful communication. This radio transmitter has been approved by Industry Canada to operate with the antenna types listed in the user guide with the maximum permissible gain and required antenna impedance for each antenna type indicated. Antenna types not included in this list, having a gain greater than the maximum gain indicated for that type, are strictly prohibited for use with this device.

Concernant les EVMs avec antennes détachables

Conformément à la réglementation d'Industrie Canada, le présent émetteur radio peut fonctionner avec une antenne d'un type et d'un gain maximal (ou inférieur) approuvé pour l'émetteur par Industrie Canada. Dans le but de réduire les risques de brouillage radioélectrique à l'intention des autres utilisateurs, il faut choisir le type d'antenne et son gain de sorte que la puissance isotrope rayonnée équivalente (p.i.r.e.) ne dépasse pas l'intensité nécessaire à l'établissement d'une communication satisfaisante. Le présent émetteur radio a été approuvé par Industrie Canada pour fonctionner avec les types d'antenne énumérés dans le manuel d'usage et ayant un gain admissible maximal et l'impédance requise pour chaque type d'antenne. Les types d'antenne non inclus dans cette liste, ou dont le gain est supérieur au gain maximal indiqué, sont strictement interdits pour l'exploitation de l'émetteur

3.3 *Japan*

3.3.1 *Notice for EVMs delivered in Japan:* Please see http://www.tij.co.jp/lsds/ti_ja/general/eStore/notice_01.page 日本国内に輸入される評価用キット、ボードについては、次のところをご覧ください。
http://www.tij.co.jp/lsds/ti_ja/general/eStore/notice_01.page

3.3.2 *Notice for Users of EVMs Considered "Radio Frequency Products" in Japan:* EVMs entering Japan may not be certified by TI as conforming to Technical Regulations of Radio Law of Japan.

If User uses EVMs in Japan, not certified to Technical Regulations of Radio Law of Japan, User is required by Radio Law of Japan to follow the instructions below with respect to EVMs:

1. Use EVMs in a shielded room or any other test facility as defined in the notification #173 issued by Ministry of Internal Affairs and Communications on March 28, 2006, based on Sub-section 1.1 of Article 6 of the Ministry's Rule for Enforcement of Radio Law of Japan,
2. Use EVMs only after User obtains the license of Test Radio Station as provided in Radio Law of Japan with respect to EVMs, or
3. Use of EVMs only after User obtains the Technical Regulations Conformity Certification as provided in Radio Law of Japan with respect to EVMs. Also, do not transfer EVMs, unless User gives the same notice above to the transferee. Please note that if User does not follow the instructions above, User will be subject to penalties of Radio Law of Japan.

【無線電波を送信する製品の開発キットをお使いになる際の注意事項】 開発キットの中には技術基準適合証明を受けていないものがあります。 技術適合証明を受けていないもののご使用に際しては、電波法遵守のため、以下のいずれかの措置を取っていただく必要がありますのでご注意ください。

1. 電波法施行規則第6条第1項第1号に基づく平成18年3月28日総務省告示第173号で定められた電波暗室等の試験設備でご使用いただく。
2. 実験局の免許を取得後ご使用いただく。
3. 技術基準適合証明を取得後ご使用いただく。

なお、本製品は、上記の「ご使用にあたっての注意」を譲渡先、移転先に通知しない限り、譲渡、移転できないものとします。

上記を遵守頂けない場合は、電波法の罰則が適用される可能性があることをご留意ください。 日本テキサス・インスツルメンツ株式会社

東京都新宿区西新宿６丁目２４番１号

西新宿三井ビル

3.3.3 *Notice for EVMs for Power Line Communication:* Please see http://www.tij.co.jp/lsds/ti_ja/general/eStore/notice_02.page

電力線搬送波通信についての開発キットをお使いになる際の注意事項については、次のところをご覧ください。http://www.tij.co.jp/lsds/ti_ja/general/eStore/notice_02.page

4 *EVM Use Restrictions and Warnings:*

4.1 EVMS ARE NOT FOR USE IN FUNCTIONAL SAFETY AND/OR SAFETY CRITICAL EVALUATIONS, INCLUDING BUT NOT LIMITED TO EVALUATIONS OF LIFE SUPPORT APPLICATIONS.

4.2 User must read and apply the user guide and other available documentation provided by TI regarding the EVM prior to handling or using the EVM, including without limitation any warning or restriction notices. The notices contain important safety information related to, for example, temperatures and voltages.

4.3 *Safety-Related Warnings and Restrictions:*

4.3.1 User shall operate the EVM within TI's recommended specifications and environmental considerations stated in the user guide, other available documentation provided by TI, and any other applicable requirements and employ reasonable and customary safeguards. Exceeding the specified performance ratings and specifications (including but not limited to input and output voltage, current, power, and environmental ranges) for the EVM may cause personal injury or death, or property damage. If there are questions concerning performance ratings and specifications, User should contact a TI field representative prior to connecting interface electronics including input power and intended loads. Any loads applied outside of the specified output range may also result in unintended and/or inaccurate operation and/or possible permanent damage to the EVM and/or interface electronics. Please consult the EVM user guide prior to connecting any load to the EVM output. If there is uncertainty as to the load specification, please contact a TI field representative. During normal operation, even with the inputs and outputs kept within the specified allowable ranges, some circuit components may have elevated case temperatures. These components include but are not limited to linear regulators, switching transistors, pass transistors, current sense resistors, and heat sinks, which can be identified using the information in the associated documentation. When working with the EVM, please be aware that the EVM may become very warm.

4.3.2 EVMs are intended solely for use by technically qualified, professional electronics experts who are familiar with the dangers and application risks associated with handling electrical mechanical components, systems, and subsystems. User assumes all responsibility and liability for proper and safe handling and use of the EVM by User or its employees, affiliates, contractors or designees. User assumes all responsibility and liability to ensure that any interfaces (electronic and/or mechanical) between the EVM and any human body are designed with suitable isolation and means to safely limit accessible leakage currents to minimize the risk of electrical shock hazard. User assumes all responsibility and liability for any improper or unsafe handling or use of the EVM by User or its employees, affiliates, contractors or designees.

4.4 User assumes all responsibility and liability to determine whether the EVM is subject to any applicable international, federal, state, or local laws and regulations related to User's handling and use of the EVM and, if applicable, User assumes all responsibility and liability for compliance in all respects with such laws and regulations. User assumes all responsibility and liability for proper disposal and recycling of the EVM consistent with all applicable international, federal, state, and local requirements.

5. *Accuracy of Information:* To the extent TI provides information on the availability and function of EVMs, TI attempts to be as accurate as possible. However, TI does not warrant the accuracy of EVM descriptions, EVM availability or other information on its websites as accurate, complete, reliable, current, or error-free.

6. *Disclaimers:*

   6.1 EXCEPT AS SET FORTH ABOVE, EVMS AND ANY WRITTEN DESIGN MATERIALS PROVIDED WITH THE EVM (AND THE DESIGN OF THE EVM ITSELF) ARE PROVIDED "AS IS" AND "WITH ALL FAULTS." TI DISCLAIMS ALL OTHER WARRANTIES, EXPRESS OR IMPLIED, REGARDING SUCH ITEMS, INCLUDING BUT NOT LIMITED TO ANY IMPLIED WARRANTIES OF MERCHANTABILITY OR FITNESS FOR A PARTICULAR PURPOSE OR NON-INFRINGEMENT OF ANY THIRD PARTY PATENTS, COPYRIGHTS, TRADE SECRETS OR OTHER INTELLECTUAL PROPERTY RIGHTS.

   6.2 EXCEPT FOR THE LIMITED RIGHT TO USE THE EVM SET FORTH HEREIN, NOTHING IN THESE TERMS AND CONDITIONS SHALL BE CONSTRUED AS GRANTING OR CONFERRING ANY RIGHTS BY LICENSE, PATENT, OR ANY OTHER INDUSTRIAL OR INTELLECTUAL PROPERTY RIGHT OF TI, ITS SUPPLIERS/LICENSORS OR ANY OTHER THIRD PARTY, TO USE THE EVM IN ANY FINISHED END-USER OR READY-TO-USE FINAL PRODUCT, OR FOR ANY INVENTION, DISCOVERY OR IMPROVEMENT MADE, CONCEIVED OR ACQUIRED PRIOR TO OR AFTER DELIVERY OF THE EVM.

7. *USER'S INDEMNITY OBLIGATIONS AND REPRESENTATIONS.* USER WILL DEFEND, INDEMNIFY AND HOLD TI, ITS LICENSORS AND THEIR REPRESENTATIVES HARMLESS FROM AND AGAINST ANY AND ALL CLAIMS, DAMAGES, LOSSES, EXPENSES, COSTS AND LIABILITIES (COLLECTIVELY, "CLAIMS") ARISING OUT OF OR IN CONNECTION WITH ANY HANDLING OR USE OF THE EVM THAT IS NOT IN ACCORDANCE WITH THESE TERMS AND CONDITIONS. THIS OBLIGATION SHALL APPLY WHETHER CLAIMS ARISE UNDER STATUTE, REGULATION, OR THE LAW OF TORT, CONTRACT OR ANY OTHER LEGAL THEORY, AND EVEN IF THE EVM FAILS TO PERFORM AS DESCRIBED OR EXPECTED.

8. *Limitations on Damages and Liability:*

   8.1 *General Limitations*. IN NO EVENT SHALL TI BE LIABLE FOR ANY SPECIAL, COLLATERAL, INDIRECT, PUNITIVE, INCIDENTAL, CONSEQUENTIAL, OR EXEMPLARY DAMAGES IN CONNECTION WITH OR ARISING OUT OF THESE TERMS ANDCONDITIONS OR THE USE OF THE EVMS PROVIDED HEREUNDER, REGARDLESS OF WHETHER TI HAS BEEN ADVISED OF THE POSSIBILITY OF SUCH DAMAGES. EXCLUDED DAMAGES INCLUDE, BUT ARE NOT LIMITED TO, COST OF REMOVAL OR REINSTALLATION, ANCILLARY COSTS TO THE PROCUREMENT OF SUBSTITUTE GOODS OR SERVICES, RETESTING, OUTSIDE COMPUTER TIME, LABOR COSTS, LOSS OF GOODWILL, LOSS OF PROFITS, LOSS OF SAVINGS, LOSS OF USE, LOSS OF DATA, OR BUSINESS INTERRUPTION. NO CLAIM, SUIT OR ACTION SHALL BE BROUGHT AGAINST TI MORE THAN ONE YEAR AFTER THE RELATED CAUSE OF ACTION HAS OCCURRED.

   8.2 *Specific Limitations.* IN NO EVENT SHALL TI'S AGGREGATE LIABILITY FROM ANY WARRANTY OR OTHER OBLIGATION ARISING OUT OF OR IN CONNECTION WITH THESE TERMS AND CONDITIONS, OR ANY USE OF ANY TI EVM PROVIDED HEREUNDER, EXCEED THE TOTAL AMOUNT PAID TO TI FOR THE PARTICULAR UNITS SOLD UNDER THESE TERMS AND CONDITIONS WITH RESPECT TO WHICH LOSSES OR DAMAGES ARE CLAIMED. THE EXISTENCE OF MORE THAN ONE CLAIM AGAINST THE PARTICULAR UNITS SOLD TO USER UNDER THESE TERMS AND CONDITIONS SHALL NOT ENLARGE OR EXTEND THIS LIMIT.

9. *Return Policy.* Except as otherwise provided, TI does not offer any refunds, returns, or exchanges. Furthermore, no return of EVM(s) will be accepted if the package has been opened and no return of the EVM(s) will be accepted if they are damaged or otherwise not in a resalable condition. If User feels it has been incorrectly charged for the EVM(s) it ordered or that delivery violates the applicable order, User should contact TI. All refunds will be made in full within thirty (30) working days from the return of the components(s), excluding any postage or packaging costs.

10. *Governing Law:* These terms and conditions shall be governed by and interpreted in accordance with the laws of the State of Texas, without reference to conflict-of-laws principles. User agrees that non-exclusive jurisdiction for any dispute arising out of or relating to these terms and conditions lies within courts located in the State of Texas and consents to venue in Dallas County, Texas. Notwithstanding the foregoing, any judgment may be enforced in any United States or foreign court, and TI may seek injunctive relief in any United States or foreign court.

Mailing Address: Texas Instruments, Post Office Box 655303, Dallas, Texas 75265
Copyright © 2015, Texas Instruments Incorporated

IMPORTANT NOTICE

Texas Instruments Incorporated and its subsidiaries (TI) reserve the right to make corrections, enhancements, improvements and other changes to its semiconductor products and services per JESD46, latest issue, and to discontinue any product or service per JESD48, latest issue. Buyers should obtain the latest relevant information before placing orders and should verify that such information is current and complete. All semiconductor products (also referred to herein as “components”) are sold subject to TI’s terms and conditions of sale supplied at the time of order acknowledgment.

TI warrants performance of its components to the specifications applicable at the time of sale, in accordance with the warranty in TI’s terms and conditions of sale of semiconductor products. Testing and other quality control techniques are used to the extent TI deems necessary to support this warranty. Except where mandated by applicable law, testing of all parameters of each component is not necessarily performed.

TI assumes no liability for applications assistance or the design of Buyers’ products. Buyers are responsible for their products and applications using TI components. To minimize the risks associated with Buyers’ products and applications, Buyers should provide adequate design and operating safeguards.

TI does not warrant or represent that any license, either express or implied, is granted under any patent right, copyright, mask work right, or other intellectual property right relating to any combination, machine, or process in which TI components or services are used. Information published by TI regarding third-party products or services does not constitute a license to use such products or services or a warranty or endorsement thereof. Use of such information may require a license from a third party under the patents or other intellectual property of the third party, or a license from TI under the patents or other intellectual property of TI.

Reproduction of significant portions of TI information in TI data books or data sheets is permissible only if reproduction is without alteration and is accompanied by all associated warranties, conditions, limitations, and notices. TI is not responsible or liable for such altered documentation. Information of third parties may be subject to additional restrictions.

Resale of TI components or services with statements different from or beyond the parameters stated by TI for that component or service voids all express and any implied warranties for the associated TI component or service and is an unfair and deceptive business practice. TI is not responsible or liable for any such statements.

Buyer acknowledges and agrees that it is solely responsible for compliance with all legal, regulatory and safety-related requirements concerning its products, and any use of TI components in its applications, notwithstanding any applications-related information or support that may be provided by TI. Buyer represents and agrees that it has all the necessary expertise to create and implement safeguards which anticipate dangerous consequences of failures, monitor failures and their consequences, lessen the likelihood of failures that might cause harm and take appropriate remedial actions. Buyer will fully indemnify TI and its representatives against any damages arising out of the use of any TI components in safety-critical applications.

In some cases, TI components may be promoted specifically to facilitate safety-related applications. With such components, TI’s goal is to help enable customers to design and create their own end-product solutions that meet applicable functional safety standards and requirements. Nonetheless, such components are subject to these terms.

No TI components are authorized for use in FDA Class III (or similar life-critical medical equipment) unless authorized officers of the parties have executed a special agreement specifically governing such use.

Only those TI components which TI has specifically designated as military grade or “enhanced plastic” are designed and intended for use in military/aerospace applications or environments. Buyer acknowledges and agrees that any military or aerospace use of TI components which have ***not*** been so designated is solely at the Buyer's risk, and that Buyer is solely responsible for compliance with all legal and regulatory requirements in connection with such use.

TI has specifically designated certain components as meeting ISO/TS16949 requirements, mainly for automotive use. In any case of use of non-designated products, TI will not be responsible for any failure to meet ISO/TS16949.

Products		**Applications**	
Audio	www.ti.com/audio	Automotive and Transportation	www.ti.com/automotive
Amplifiers	amplifier.ti.com	Communications and Telecom	www.ti.com/communications
Data Converters	dataconverter.ti.com	Computers and Peripherals	www.ti.com/computers
DLP® Products	www.dlp.com	Consumer Electronics	www.ti.com/consumer-apps
DSP	dsp.ti.com	Energy and Lighting	www.ti.com/energy
Clocks and Timers	www.ti.com/clocks	Industrial	www.ti.com/industrial
Interface	interface.ti.com	Medical	www.ti.com/medical
Logic	logic.ti.com	Security	www.ti.com/security
Power Mgmt	power.ti.com	Space, Avionics and Defense	www.ti.com/space-avionics-defense
Microcontrollers	microcontroller.ti.com	Video and Imaging	www.ti.com/video
RFID	www.ti-rfid.com		
OMAP Applications Processors	www.ti.com/omap	**TI E2E Community**	e2e.ti.com
Wireless Connectivity	www.ti.com/wirelessconnectivity		

Mailing Address: Texas Instruments, Post Office Box 655303, Dallas, Texas 75265
Copyright © 2015, Texas Instruments Incorporated